TH	THAILAND

Diagram / Parts List

ML002G

CORDLESS WORKLIGHT

2024/08

(TH) ML002G / CORDLESS WORKLIGHT

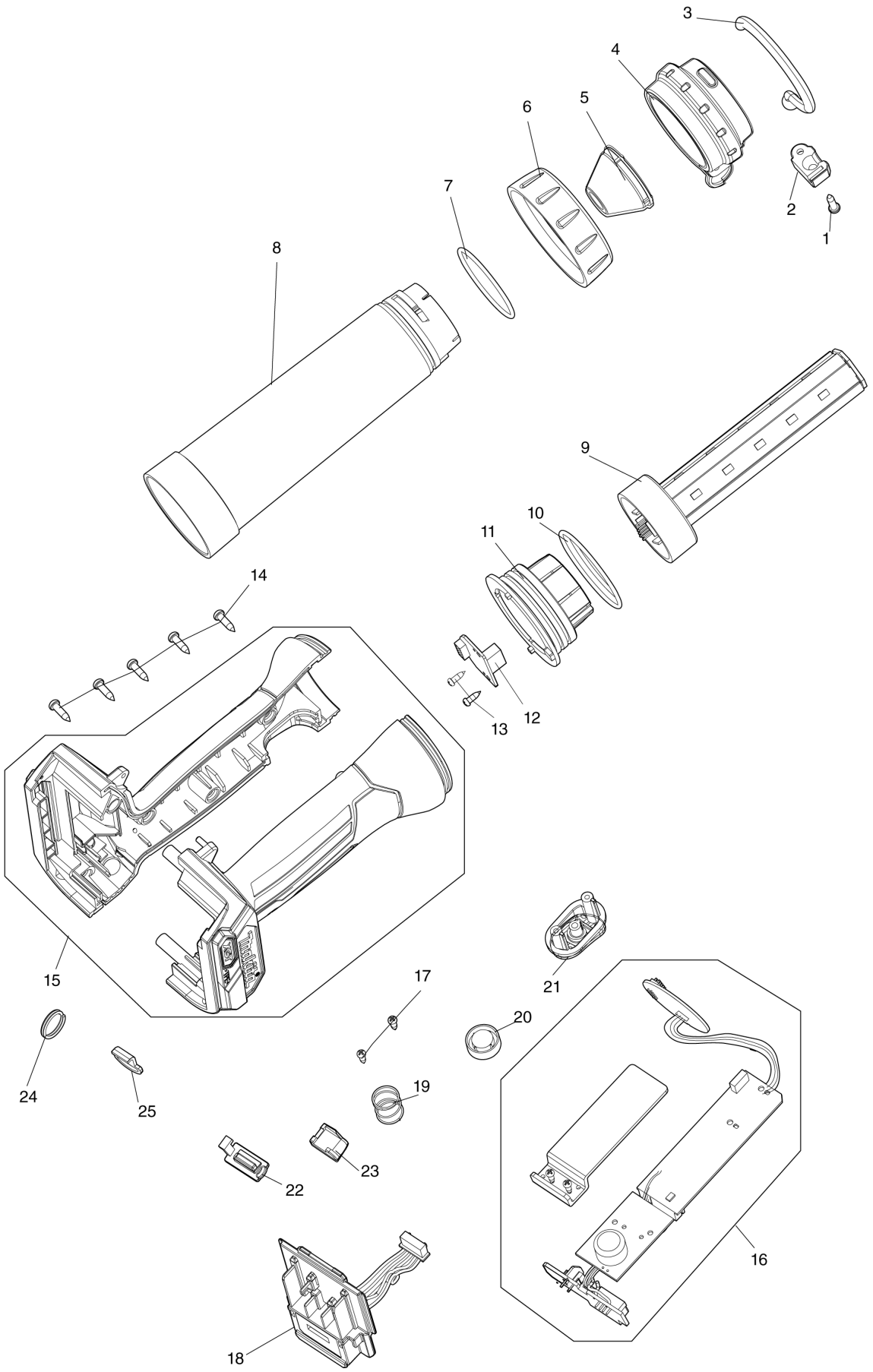

TH	THAILAND

ML002G / CORDLESS WORKLIGHT

Item	Sub	Parts No.	Parts Description	Qty	I/C	E/C No.	Close No.	Remark
001		GM00001024	SCREW 3X12 B0130120202	1				
002		GM00001472	HOOK BALL COVER C3020807002	1				
003		GM00001471	HOOK ASSY ROS88070000	1				
004		GM00001470	BEZEL ASSY ROS88070001	1				
005		GM00001469	REFLECTOR ROS88070008	1				
006		GM00001468	LOCK RING C0110184004	1				
007		GM00001467	O-RING C9820807003	1				
008		GM00001466	DIFFUSING CAP ROS88070007	1				
009		GM00002278	LED LAMP TUBE ASSY	1				
010		GM00001464	O-RING (CAP) C9820807004	1				
011		GM00001463	LAMP HOLDER C1020807004	1				
012		GM00001462	FEMALE SOCKET PCBA ROS88070003	1				
013		GM00001395	SCREW 2.6X8PB B0126081102	2				
014		GM00001024	SCREW 3X12 B0130120202	5				
015		GM00002342	HOUSING ASSY(OLIVE)	1				
016		GM00002276	MAIN PCBA ASSY	1			Y09016	
016-1		GM00002488	MAIN +USB PCBA ASSY	1	<	Y09016		
017		GM00001395	SCREW 2.6X8PB B0126081102	2				
018		GM00002275	BATTERY HOLDER	1				
019		GM00001689	METAL SPRING, B1312104021	1				
020		GM00001690	PLASTIC SWITCH POST C102010400	1				
021		GM00001461	SWITCH HOLDER ASSY ROS88070004	1				
022		GM00002277	USB RUBBER COVER	1				
023		GM00002279	USB SWITCH BUTTON	1				
024		SM00000190	RING B3103184009	1				
025		GM00001459	METAL STRAP HOOK B2808807021	1				

A:

Interchange
O : Yes
X : No
< : the new part can be substituted for the current.
> : the current part can be substituted for the new.
S : Interchangeable as a set.