TH	THAILAND

Diagram / Parts List

DTC100

CORDLESS CABLE CUTTER

2024/08

(TH) DTC100 / CORDLESS CABLE CUTTER

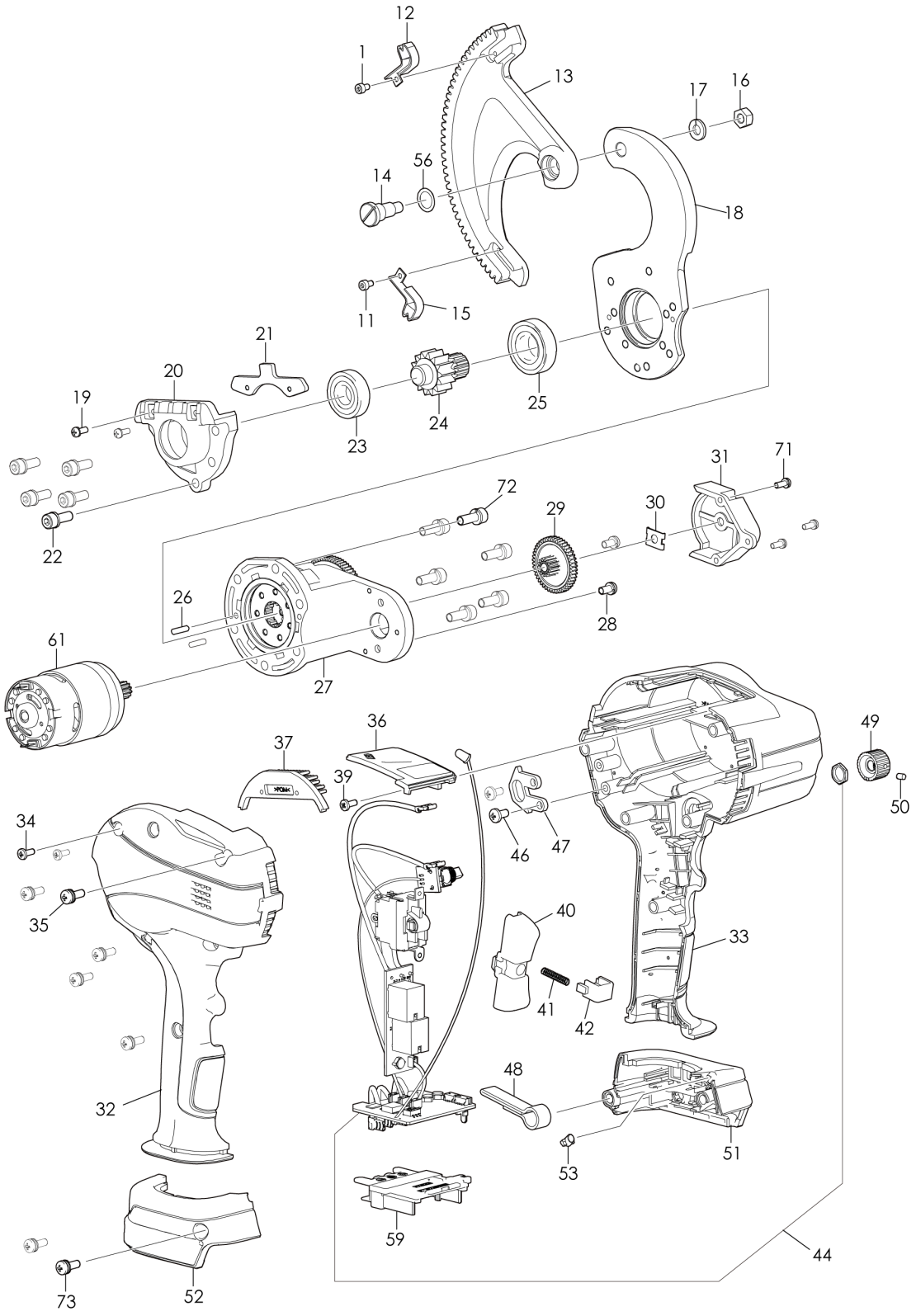

TH	THAILAND

DTC100 / CORDLESS CABLE CUTTER

Item	Sub	Parts No.	Parts Description	Qty	I/C	E/C No.	Close No.	Remark
001		ZM00000127	H.S. HEAD SCREW M3X3	1				
011		ZM00000127	H.S. HEAD SCREW M3X3	1				
012		ZM00000128	SPRING GEAR B ASSY	1				
013		ZM00000129	MOVING BLADE	1				
014		ZM00000130	-SHOULDER SCREW	1				
015		ZM00000131	SPRING GEAR A ASSY	1				
016		ZM00000132	HEX LOCK NUT M6	1				
017		ZM00000133	SPRING WASHER 6	1				
018		ZM00000134	STATIONARY BLADE	1				
019		ZM00000135	PAN HEAD SCREW M3X8	2				
020		ZM00000136	BEARING CASE	1				
021		ZM00000137	CUTTER PLATE	1				
022		ZM00000138	HEX. SOCKET HEAD BOLT M5X14	5				
023		ZM00000139	BALL BEARING 6001VV	1				
024		ZM00000140	PINION GEAR	1				
025		ZM00000141	BALL BEARING 6002VV	1				
026		ZM00000142	NEEDLE PIN 3X11.8	2				
027		ZM00000143	GEAR CASE ASSY	1				
028		ZM00000144	PAN HEAD SCREW M4X8	2				
029		ZM00000145	SPUR GEAR	1				
030		ZM00000146	GEAR PLATE	1				
031		ZM00000147	GEAR COVER	1				
032		ZM00000162	HOUSING ASSY	1				
	D10		INC. 33					
033		ZM00000162	HOUSING ASSY	1				
	C10	ZM00000163	MAKITA LOGO LABEL	1				
	D10		INC. 32					
034		ZM00000148	TAPPING SCREW 3X14	2				
035		ZM00000149	PAN HEAD SCREW M4X12	5				
036		ZM00000187	LED COVER	1				
	C10	ZM00000188	CAUTION LABEL	1				
037		ZM00000150	BRUSH PLATE	1				
039		ZM00000151	TAPPING SCREW 3X8	1				
040		ZM00000152	SWITCH KNOB	1				
041		ZM00000153	COMPRESSION SPRING	1				
042		ZM00000154	LOCK OFF BUTTON	1				
044		ZM00000155	SWITCH CIRCUIT UNIT	1				
046		ZM00000156	TAPPING SCREW 4X12	2				
047		ZM00000157	STRAP PLATE	1				
048		ZM00000015	STRAP RING	1				
049		ZM00000158	DIAL KNOB	1				
050		ZM00000095	HEX. SET SCREW M3X5	1				
051		ZM00000185	BATTERY CASE ASSY	1				
	C10	263005-3	RUBBER PIN 6	2				
	D10		INC. 52					
052		ZM00000185	BATTERY CASE ASSY	1				
	C10	263005-3	RUBBER PIN 6	2				
	D10		INC. 51					
053		ZM00000159	CAP	1				
056		ZM00000160	FLAT WASHER	1				
059		643874-2	TERMINAL	1				
061		ZM00000161	MOTOR ASSY	1				
071		ZM00000135	PAN HEAD SCREW M3X8	3				
072		ZM00000138	HEX. SOCKET HEAD BOLT M5X14	6				
073		ZM00000149	PAN HEAD SCREW M4X12	2				
A01		ZM00000169	PLASTIC CASE	1				

A:

Interchange
O : Yes
X : No
< : the new part can be substituted for the current.
> : the current part can be substituted for the new.
S : Interchangeable as a set.