TH	THAILAND

Diagram / Parts List

DTW302

CORDLESS IMPACT WRENCH

2024/07

(TH) DTW302 / CORDLESS IMPACT WRENCH

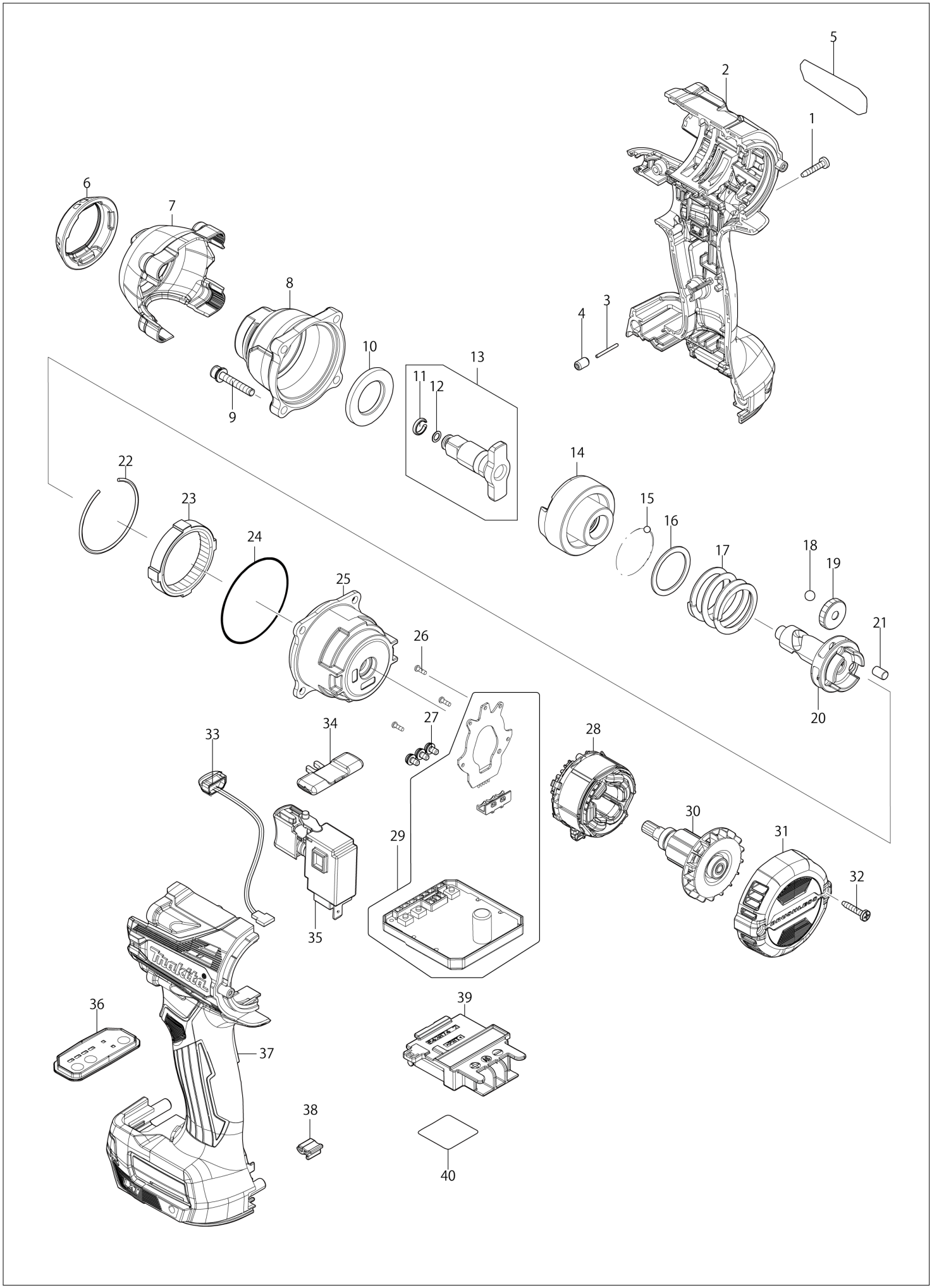

TH	THAILAND

DTW302 / CORDLESS IMPACT WRENCH

Item	Sub	Parts No.	Parts Description	Qty	I/C	E/C No.	Close No.	Remark
001		266130-9	TAPPING SCREW BIND PT 3X16	8				
002		183P27-2	HOUSING SET	1				
	C10	263005-3	RUBBER PIN 6	2				
	C20	252126-6	HEX. LOCK NUT M4-7	2				
	D10		INC. 37					
003		268284-8	PIN 1.5	1				
004		263036-2	RUBBER PIN 5	1				
005		811V29-1	DTW302 NAME PLATE	1				
006		422584-2	BUMPER	1				
007		412556-5	HAMMER CASE COVER	1				
008		141E94-7	HAMMER CASE COMPLETE	1				
009		265472-8	HEX. SOCKET HEAD BOLT M4X25	4				
010		261171-0	NYLON WASHER 20	1				
011		233943-3	RING SPRING 8	1				
012		213960-9	O RING 5	1				
013		136510-2	ANVIL ASS'Y	1				
	D10		INC. 11,12					
014		327892-5	HAMMER	1				
015		216001-0	STEEL BALL 3.5	24				
016		267175-0	FLAT WASHER 24	1				
017		234322-8	COMPRESSION SPRING 25	1				
018		216011-7	STEEL BALL 5.6	2				
019		227338-0	SPUR GEAR 22	3				
020		327573-1	SPINDLE	1				
021		268311-1	PIN 5	3				
022		233910-8	RING SPRING 43	1				
023		227337-2	INTERNAL GEAR 51	1				
024		213785-1	O-RING 49	1				
025		140T37-6	INTERNAL GEAR CASE COMPLETE	1				
026		266490-9	TAPPING SCREW PT 2X6	3				
027		652069-6	FLAT HEAD SCREW M3X6	3				
028		629477-6	STATOR	1			DB485	
028-1		629A98-0	STATOR	1	<	DB485		
029		620C64-2	CONTROLLER	1				
030		619626-3	ROTOR	1				
031		412555-7	REAR COVER	1				
032		266130-9	TAPPING SCREW BIND PT 3X16	2				
033		620521-2	LED CIRCUIT	1				
034		455053-8	F/R CHANGE LEVER	1				
035		651443-5	SWITCH C3JR-4B	1				
036		140T43-1	SWITCH PLATE COMPLETE	1			DS693	
	C10	8012S9-8	SWITCH LABEL	1			DS693	
036-1		141Y82-4	SWITCH PLATE COMPLETE	1	O	DS693		
	C10	8012S9-8	SWITCH LABEL	1		DS693		
037		183P27-2	HOUSING SET	1				
	C10	263005-3	RUBBER PIN 6	2				
	C20	252126-6	HEX. LOCK NUT M4-7	2				
	D10		INC. 2					
038		424517-3	CUSHION	1				
039		643874-2	TERMINAL	1				
040		811V33-0	DTW302 SERIAL NO. LABEL	1				
A01		266622-8	+ TRUSS HEAD SCREW M4X12	1				
A02		346317-0	HOOK	1				
F01		191K57-9	TOOL HANGER SET	1				

A:DTW302Z(N)

Interchange
O : Yes
X : No
< : the new part can be substituted for the current.
> : the current part can be substituted for the new.
S : Interchangeable as a set.