TH	THAILAND

Diagram / Parts List

DS4012

13MM DRILL

2024/07

(TH) DS4012 / 13MM DRILL

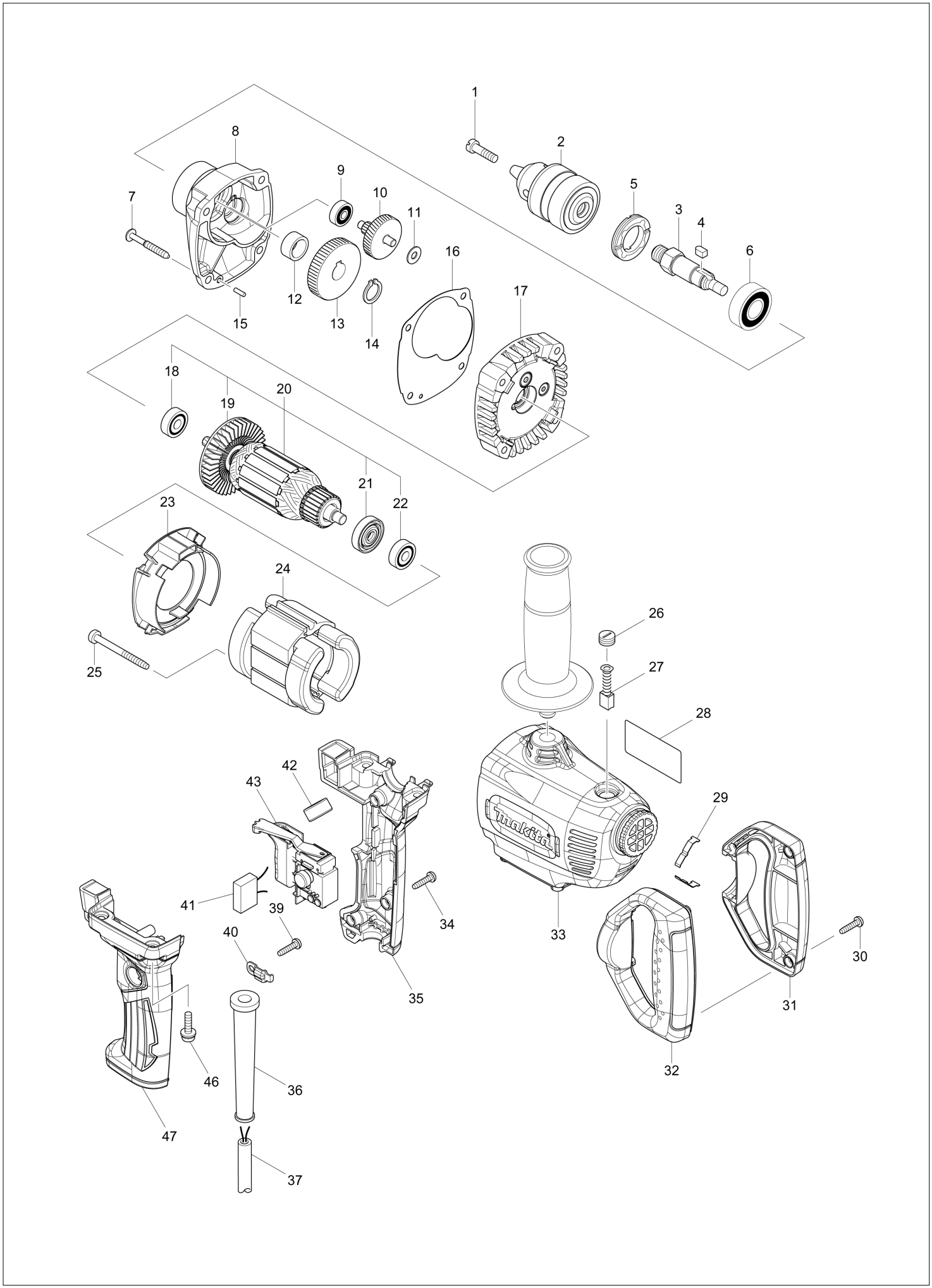

TH	THAILAND

DS4012 / 13MM DRILL

Item	Sub	Parts No.	Parts Description	Qty	I/C	E/C No.	Close No.	Remark
001		251425-3	- FLAT HEAD SCREW M6X22	1				
002		763047-2	DRILL CHUCK S13	1				
003		325494-1	SPINDLE	1				
004		254211-1	KEY 5	1				
005		285807-7	BEARING RETAINER 22-36	1				
006		211206-7	BALL BEARING 6202LLB	1				
007		266211-9	TAPPING SCREW 5X40	4				
008		140620-9	GEAR HOUSING COMPLETE	1				
	C10	263002-9	RUBBER PIN 4	1				
009		211016-2	BALL BEARING 626LLB	1				
010		226028-2	GEAR COMPLETE 7-41	1				
011		261008-1	FIBER WASHER 6	1				
012		257018-4	RING 15	1				
013		221261-1	SPUR GEAR 47	1				
014		961054-1	RETAINING RING S-14	1				
015		256180-2	PIN 3	1				
016		452066-0	GASKET	1				
017		140619-4	GEAR HOUSING COVER COMPLETE	1				
	C10	263002-9	RUBBER PIN 4	1				
018		211031-6	BALL BEARING 608LLB	1				
019		241850-6	FAN 60	1				
020		513808-8	ARMATURE ASS'Y 220V	1				
	D10		INC. 18,19,21,22					
021		681659-8	INSULATION WASHER	1				
022		211031-6	BALL BEARING 608LLB	1				
023		452063-6	BAFFLE PLATE	1				
024		525873-5	FIELD ASS'Y 220V	1				
	C10	654100-4	RING TERMINAL	2				
	C20	654501-6	CONNECTOR P-1.25	2				
025		266095-5	TAPPING SCREW 5X55	2				
026		643550-8	BRUSH HOLDER CAP 5-8	2				
027		B-80391	CARBON BRUSH SET CB-411A	1				
028		850P63-0	DS4012 NAME PLATE	1				
029		232260-8	LEAF SPRING	2				
030		265995-6	TAPPING SCREW 4X18	4				
031		188921-7	HANDLE SET	1				
	D10		INC. 32					
032		188921-7	HANDLE SET	1				
	D10		INC. 31					
033		140621-7	MOTOR HOUSING COMPLETE	1				
	C10	643455-2	BRUSH HOLDER 6X9	2				
034		265995-6	TAPPING SCREW 4X18	3				
035		183A33-7	SWITCH HANDLE SET	1				
	D10		INC. 47					
036		682566-8	CORD GUARD 10	1			DU529	
036-1		682559-5	CORD GUARD 8	1	S	DU529		
037		691015-4	POWER SUPPLY CORD 0.75-2-2.5	1			DU529	
037-1		660503-2	POWER SUPPLY CORD 0.75-2-2.5	1	S	DU529		
039		266385-6	TAPPING SCREW 4X14	1				
040		687682-1	STRAIN RELIEF	1			DU529	
040-1		687681-3	STRAIN RELIEF	1	S	DU529		
043		650742-2	SWITCH	1				
046		911233-1	PAN HEAD SCREW M5X20	4				
047		183A33-7	SWITCH HANDLE SET	1				
	D10		INC. 35					
A01		152492-0	GRIP 36 COMPLETE	1				
A02		763432-9	CHUCK KEY S13	1				

A:DS4012(H)

Interchange
O : Yes
X : No
< : the new part can be substituted for the current.
> : the current part can be substituted for the new.
S : Interchangeable as a set.