TH	THAILAND

Diagram / Parts List

MP100D

CORDLESS INFLACTOR

2022/01

(TH) MP100D / CORDLESS INFLACTOR

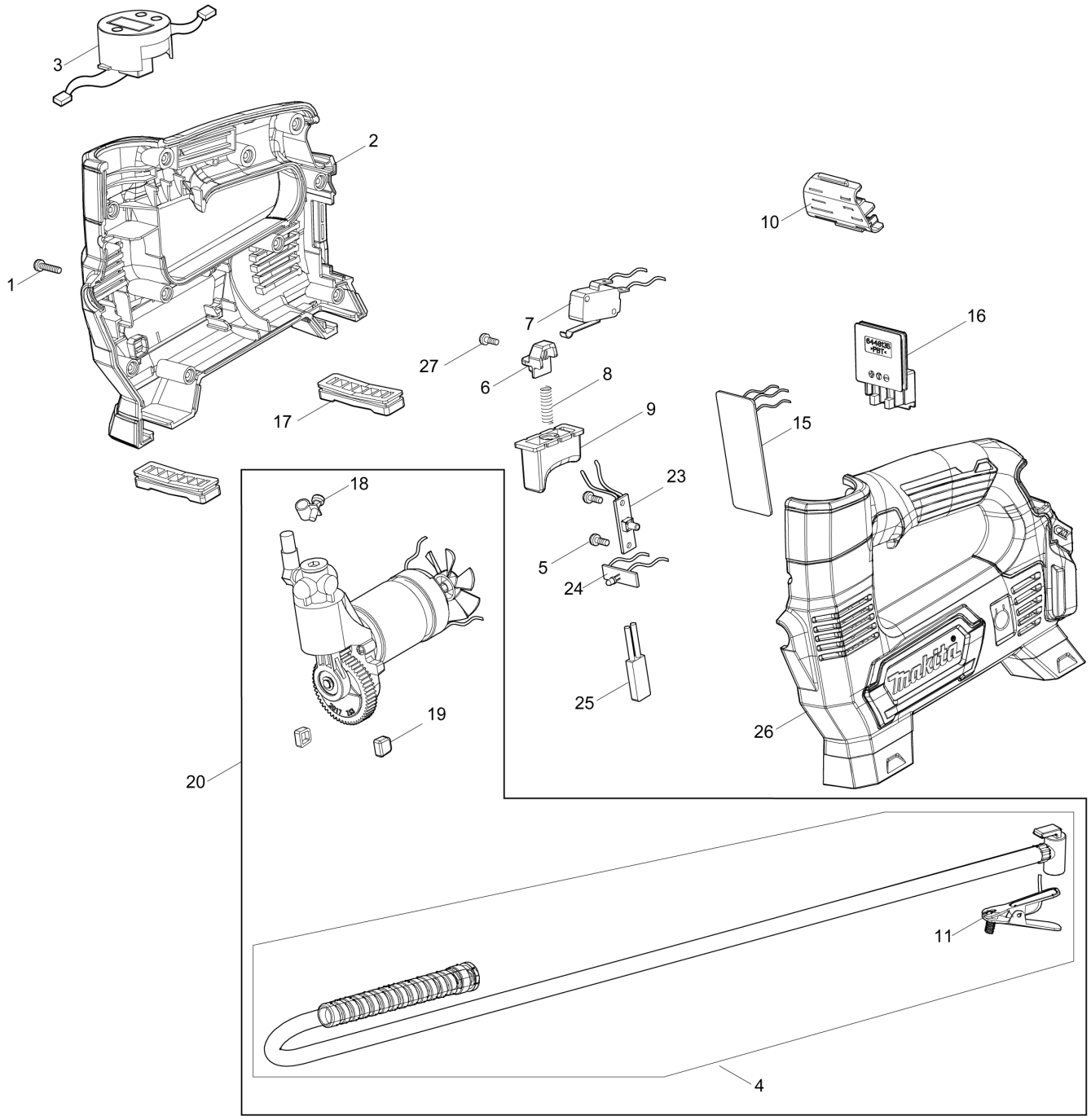

TH	THAILAND

MP100D / CORDLESS INFLACTOR

Item	Sub	Parts No.	Parts Description	Qty	I/C	E/C No.	Close No.	Remark
001		TE00000324	SCREW 3*14	10				
002		TE00000351	HOUSING SET	1			Y08502	
	D10		INC. 26				Y08502	
002-1		TE00000484	HOUSING SET	1	O	Y08502		
	D10		INC. 26			Y08502		
003		TE00000326	DIGITAL DISPLAY	1			Y08767	
003-1		TE00000629	DIGITAL DISPLAY	1	O	Y08767		
004		TE00000345	AIR PIPE ASSEMBLY(6MM)	1				
	D10		INC. 11					
004A_		TE00000638	AIR PIPE ASSEMBLY(8MM)	1		Y08765		
	D10		INC. 11			Y08765		
005		TE00000327	SCREW 3*10	2				
006		TE00000328	TRIGGER SPRING-FIXED BLOCK	1				
007		TE00000329	SWITCH	1			Y08503	
007-1		TE00000485	SWITCH TRIGGER	1	O	Y08503	Y08825	
007-2		TE00000329	SWITCH	1	X	Y08825		
008		TE00000330	SPRING	1				
009		TE00000331	SWITCH TRIGGER	1			Y08825	
009-1		TE00000485	SWITCH TRIGGER	1	X	Y08825		
010		TE00000332	FIXED BRACKET	1				
011		TE00000346	BRITISH ADAPTER	1			Y08762	
011-1		TE00000597	BRITISH ADAPTER	1	<	Y08762		
012		TE00000333	SWIM RING ADAPTER	1			Y07914	
013		TE00000334	FRENCH ADAPTER	1			Y07914	
014		TE00000335	BALL ADAPTER	1			Y07914	
015		TE00000336	PCB	1				
016		TE00000337	BATTERY TERMINAL	1				
017		TE00000338	MAT	2				
018		TE00000352	CLAMP	1				
019		TE00000339	RUBBER(CYLINDER)	1				
020		TE00000340	MOTOR ASSEMBLY	1			Y08269	
	D10		INC. 4,18,19				Y08269	
020-1		TE00000478	MOTOR ASSEMBLY	1	>	Y08269	Y08765	
	D10		INC. 28			Y08269	Y08765	
020-2		TE00000640	MOTOR ASSEMBLY	1	X	Y08765		
	D10		INC. 4,28			Y08765		
023		TE00000341	POWER ON/OFF	1				
024		TE00000342	LED PCB	1				
025		TE00000343	TERMINAL PROTECTOR	1				
026		TE00000351	HOUSING SET	1			Y08502	
	D10		INC. 2				Y08502	
026-1		TE00000484	HOUSING SET	1	O	Y08502		
	D10		INC. 2			Y08502		
027		TE00000327	SCREW 3*10	1				
028		TE00000477	CONNECTING WIRE	1		Y08269		
A01		TE00000333	SWIM RING ADAPTER	1		Y07914		
A02		TE00000334	FRENCH ADAPTER	1		Y07914	Y08762	
A02-1		TE00000594	FRENCH ADAPTER	1	<	Y08762		
A03		TE00000335	BALL ADAPTER	1		Y07914	Y08762	
A03-1		TE00000592	BALL ADAPTER	1	<	Y08762		

Interchange
O : Yes
X : No
< : the new part can be substituted for the current.
> : the current part can be substituted for the new.
S : Interchangeable as a set.