TH	THAILAND

Diagram / Parts List

DF033D

CORDLESS DRIVER DRILL

2021/12

(TH) DF033D / CORDLESS DRIVER DRILL

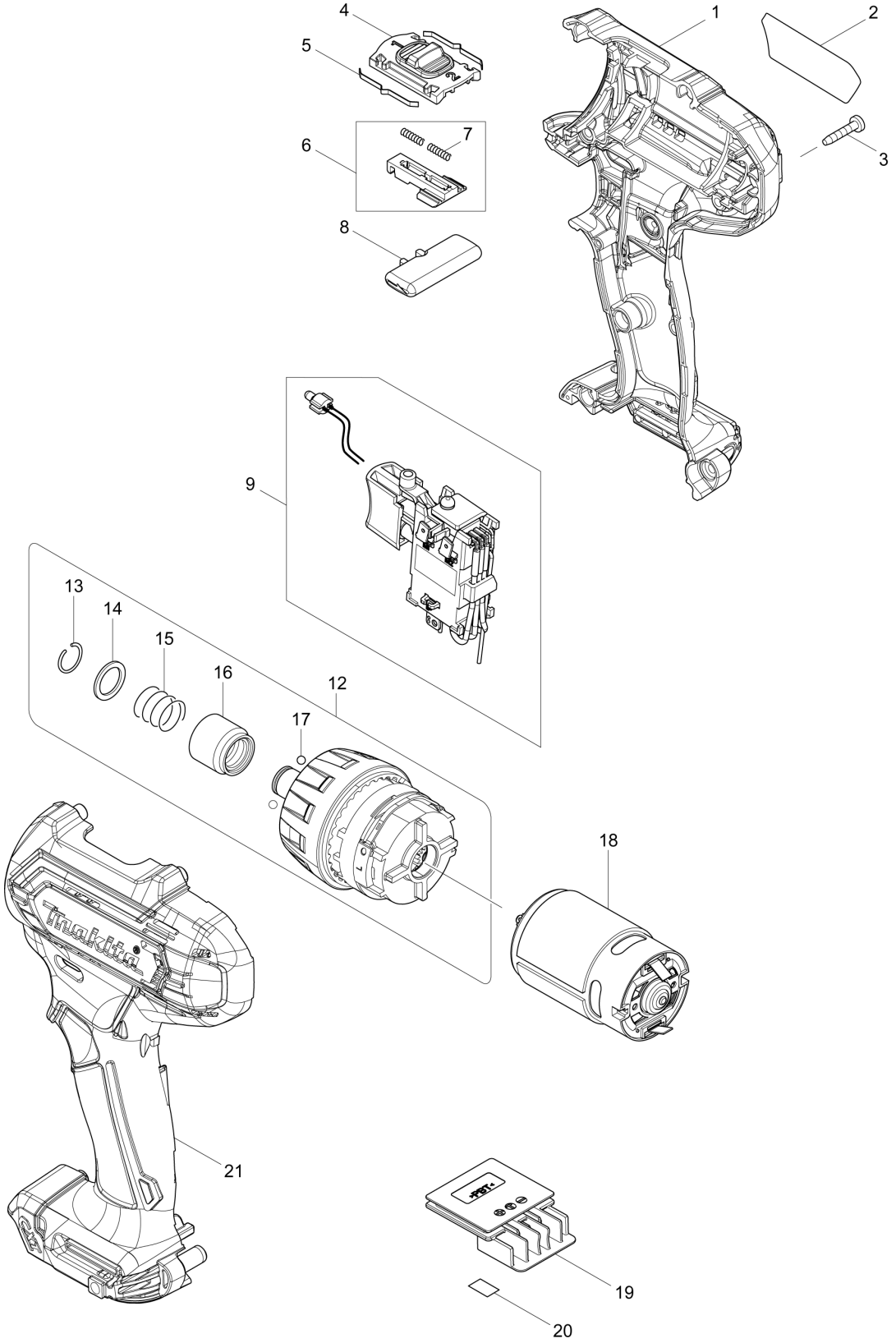

TH	THAILAND

DF033D / CORDLESS DRIVER DRILL

Item	Sub	Parts No.	Parts Description	Qty	I/C	E/C No.	Close No.	Remark
001		183K90-5	HOUSING SET	1				
	C10	252126-6	HEX. LOCK NUT M4-7	2				
	D10		INC. 21					
002		855E57-4	DF033D NAME PLATE	1				
003		266429-2	TAPPING SCREW 3X16	9				
004		459026-3	SPEED CHANGE LEVER	1				
005		232493-5	LEAF SPRING	2				
006		127127-2	CHANGE LEVER ASSEMBLY	1				
	D10		INC. 7					
007		233025-1	COMPRESSION SPRING 2	2				
008		456039-5	F/R CHANGE LEVER	1				
009		632J77-3	SWITCH UNIT	1				
	C10	620625-0	LED CIRCUIT	1				
012		127126-4	GEAR ASSEMBLY N	1			D0925	
	D10		INC. 13-17				D0925	
012-1		127126-4	GEAR ASSEMBLY N	1	O	D0925		
	D10		INC. 13-17			D0925		
013		231965-7	RING SPRING 10	1				
014		347004-4	BIT WASHER	1				
015		233005-7	COMPRESSION SPRING 13	1				
016		326677-6	BIT SLEEVE	1				
017		216019-1	STEEL BALL 3	2				
018		629395-8	DC MOTOR	1				
019		644813-5	TERMINAL	1				
020		855E64-7	DF033D SERIAL NO. LABEL	1				
021		183K90-5	HOUSING SET	1				
	C10	252126-6	HEX. LOCK NUT M4-7	2				
	D10		INC. 1					
A01		251314-2	+ SCREW M4X12	1				
A02		346909-5	HOOK	1				
A03		784202-3	PHILLIPS BIT 2-45	1			DC711	
A03-1		784043-7	+BIT 2-45	1	O	DC711		
A04B		821661-1	PLASTIC CARRYING CASE	1				
	C10	417724-5	LATCH	2				
A04C		821661-1	PLASTIC CARRYING CASE	1				
	C10	417724-5	LATCH	2				
A04D		821661-1	PLASTIC CARRYING CASE	1				
	C10	417724-5	LATCH	2				
A05B		818P05-0	DF033DWYE MODEL NO. LABEL	1				
A05C		818P10-7	DF033DWAE MODEL NO. LABEL	1				
A05D		818P14-9	DF033DWME MODEL NO. LABEL	1				
A08B		456128-6	BATTERY COVER	1				
A08C		456128-6	BATTERY COVER	1				
A08D		456128-6	BATTERY COVER	1				
A09B		***DC10WD	DC10WD BATTERY CHARGER	1				
	D10		COMPO-PARTS					
A09C		***DC10WD	DC10WD BATTERY CHARGER	1				
	D10		COMPO-PARTS					
A09D		***DC10WD	DC10WD BATTERY CHARGER	1				
	D10		COMPO-PARTS					
A10B		199291-9	BATTERY BL1016 SET	2			D0163	
A10C		199290-1	BATTERY BL1021B SET	2			D0164	
A10D		199289-6	BATTERY BL1041B SET	2			D0165	
A10-1B		199291-9	BATTERY BL1016 SET	2	<	D0163		
A10-1C		199290-1	BATTERY BL1021B SET	2	<	D0164		
A10-1D		199289-6	BATTERY BL1041B SET	2	<	D0165		

B:DF033DWYE(H)
C:DF033DWAE(H)
D:DF033DWME(H)

Interchange
O : Yes
X : No
< : the new part can be substituted for the current.
> : the current part can be substituted for the new.
S : Interchangeable as a set.