TH	THAILAND

Diagram / Parts List

ML006G

CORDLESS FLASHLIGHT

2024/07

(TH) ML006G / CORDLESS FLASHLIGHT

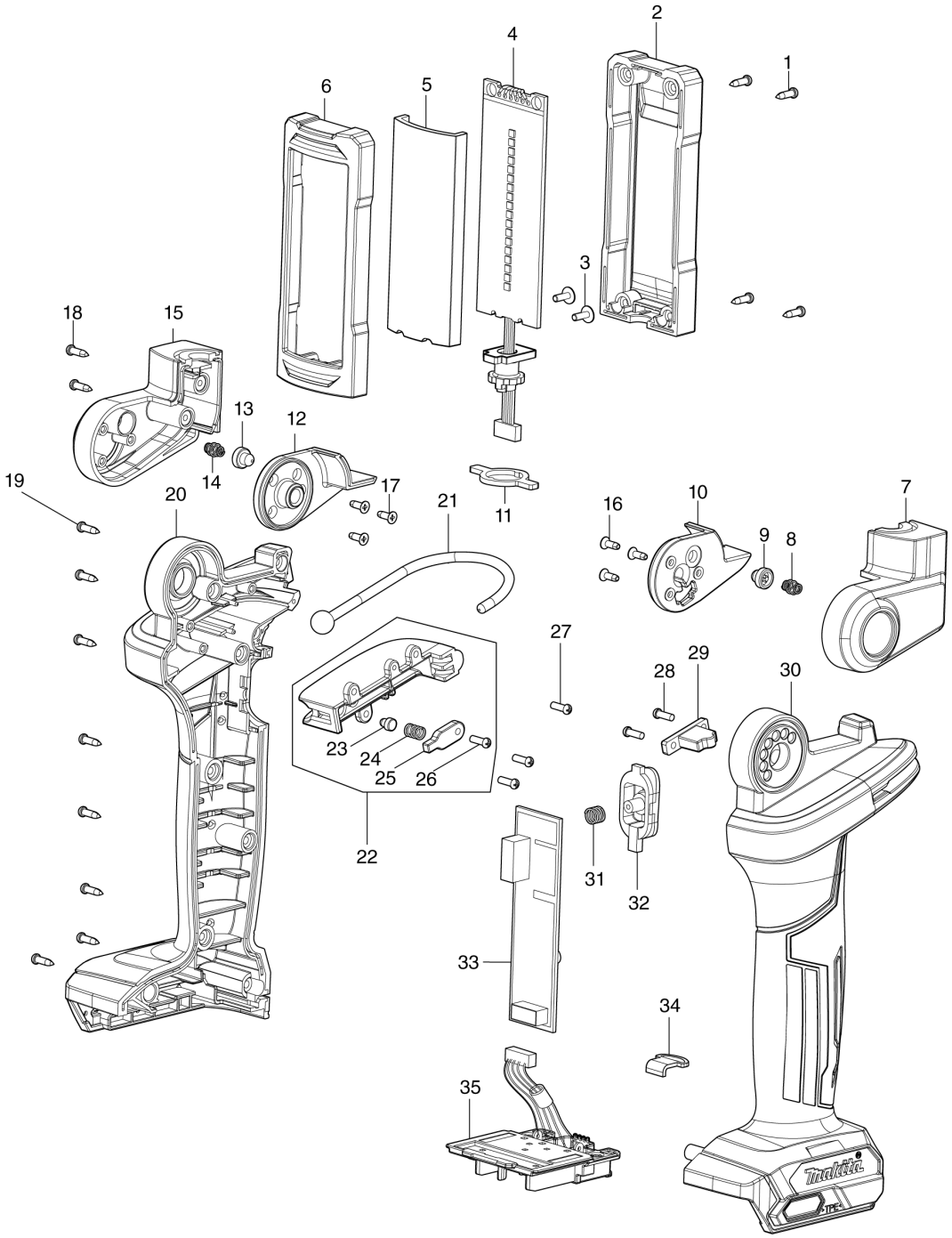

TH	THAILAND

ML006G / CORDLESS FLASHLIGHT

Item	Sub	Parts No.	Parts Description	Qty	I/C	E/C No.	Close No.	Remark
001		GM00001269	SCREW 3X12PB(B0130120202)	4				
002		GM00002324	REAR CASE	1				
003		GM00001267	SCREW 2.6X8PWB(B0126080006)	2				
004		GM00002323	LED ASSY	1				
005		GM00002322	LENS	1				
006		GM00002321	FRONT CASE	1				
007		GM00002325	LEFT ROTATOR	1				
008		GM00001270	SPRING (B1214801020)	1				
009		GM00001279	SPRING LID (C1020801001)	1				
010		GM00002326	LEFT ROTATOR BRACKET	1				
011		GM00001282	FIX PLATE (C3020801001)	1				
012		GM00002327	RIGHT ROTATOR BRACKET	1				
013		GM00001279	SPRING LID (C1020801001)	1				
014		GM00001270	SPRING (B1214801020)	1				
015		GM00002328	RIGHT ROTATOR	1				
016		GM00001268	SCREW 2.6X10KA(B0126100121)	3				
017		GM00001268	SCREW 2.6X10KA(B0126100121)	3				
018		GM00001269	SCREW 3X12PB(B0130120202)	2				
019		GM00001269	SCREW 3X12PB(B0130120202)	8				
020		GM00002329	HOUSING ASSY	1				
	D10		INC. 30					
021		GM00002331	HANGING HOOK ASSY	1				
022		GM00002330	HOOK COVER ASSY	1				
	D10		INC. 23-26					
023		GM00002339	LOCKING SHAFT	1				
024		GM00002340	SPRING	1				
025		GM00002341	COVER	1				
026		GM00001322	SCREW 2.6X8 PB	1				
027		GM00001322	SCREW 2.6X8 PB	3				
028		GM00001322	SCREW 2.6X8 PB	2				
029		GM00002332	HOOK SUPPORT	1				
030		GM00002329	HOUSING ASSY	1				
	D10		INC. 20					
031		GM00002249	SWITCH SPRING	1				
032		GM00002333	SWITCH ASSY	1				
033		GM00002334	MAIN PCBA ASSY	1			Y09016	
033-1		GM00002492	MAIN PCBA ASSY	1	<	Y09016		
034		GM00002231	STRAP HOOK	1				
035		GM00002335	TERMINAL ASSY	1				
A01		GM00001288	SHOULDER HOOK SET G0180100100	1				
A02		GM00001326	LAMP SHADE	1				

A:

Interchange
O : Yes
X : No
< : the new part can be substituted for the current.
> : the current part can be substituted for the new.
S : Interchangeable as a set.